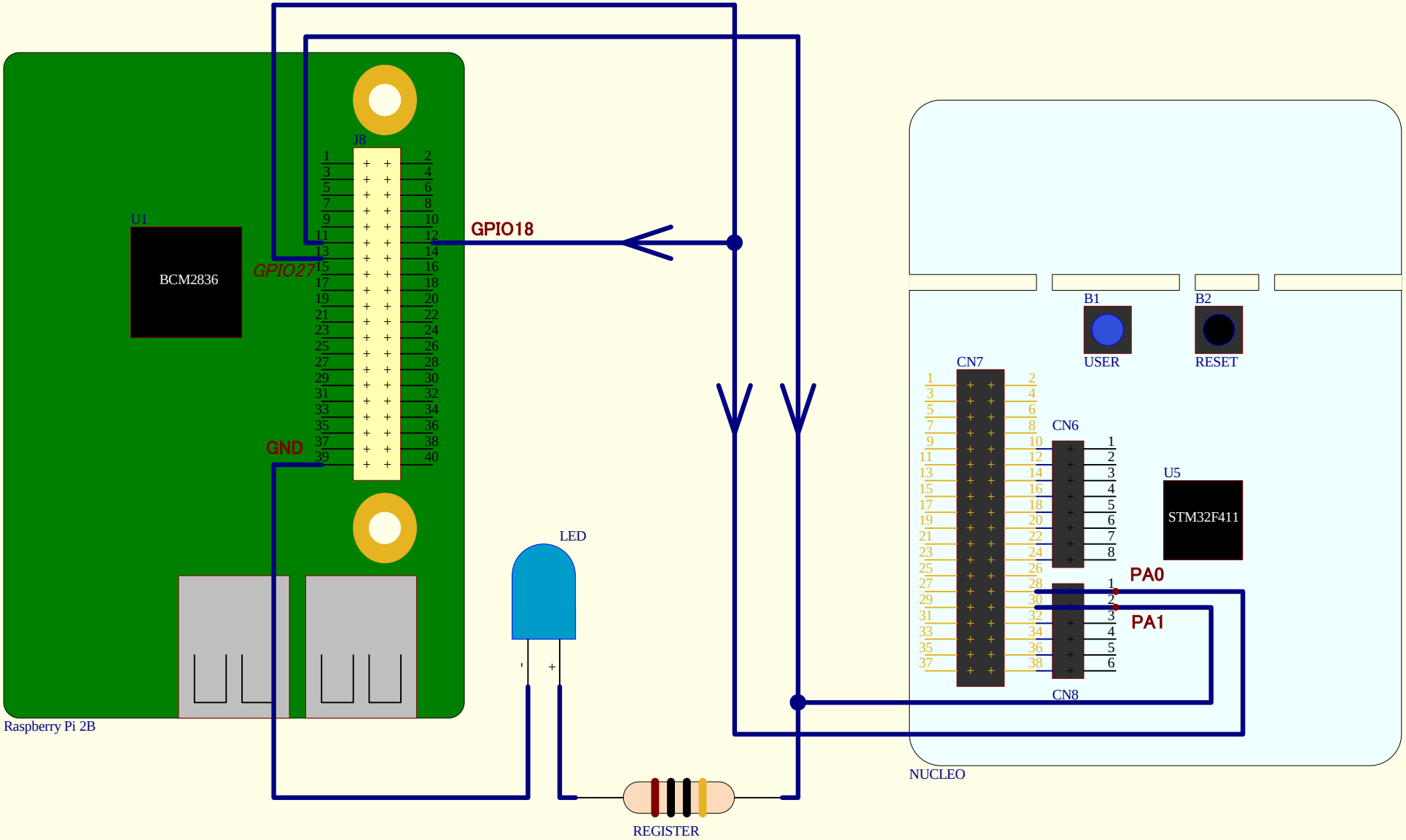
J8
U1
BCM2836
GPIO27
GPIO18
GND
Raspberry Pi 2B
LED
REGISTER
B1
USER
B2
RESET
CN7
CN6
CN8
U5
STM32F411
PA0
PA1
NUCLEO